DHBT Series

DHBT 410B 1D1

Technical datasheet

Dereike blower performance curves

Vacuum selection diagram curve

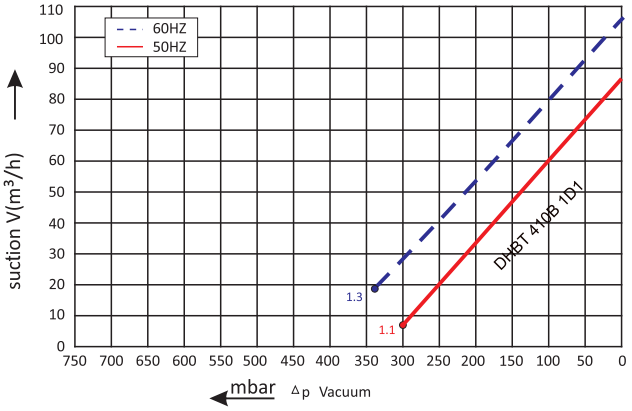

Compressor selection diagram curve

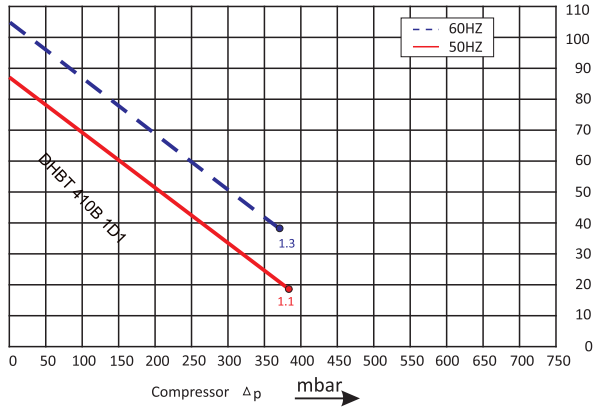

Dereike blower installation drawing

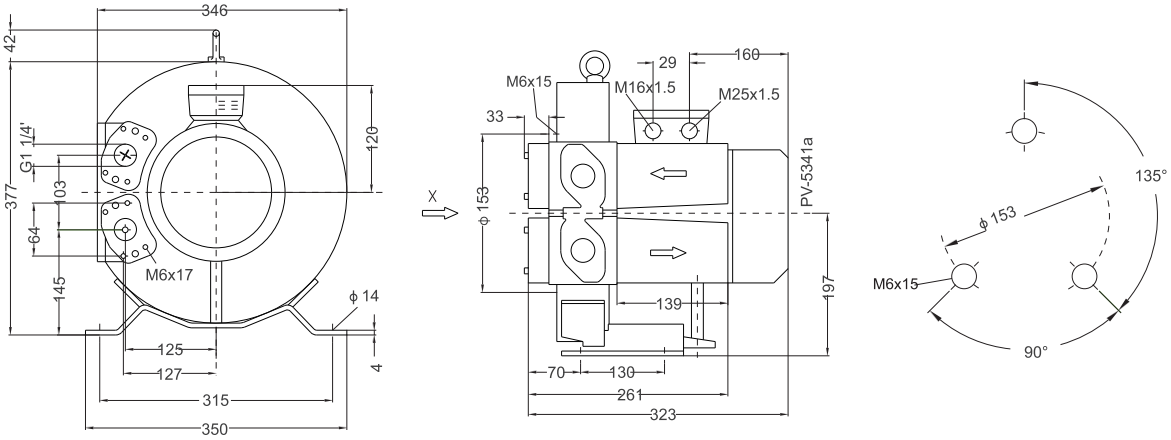

Dereike blower installation parameter

Model	Frequency HZ	Output KW	Voltage V	Current A	Airflow m³/h	Pressure vacuum mbar	Pressure compressor mbar	Noise dB(A)	Weight
DHBT 410B 1D1	50	1.1	200-240△/345-415Y	5.4△/3.1Y	87	-300	380	58	23
	60	1.3	220-275△/380-480Y	5.4△/3.1Y	105	-340	370	62	23

The performance curves of Dereike blower is tested through below ways:

Under one atmospheric pressure, suck 15℃ air and then you can calculate the data, of course allow 10% difference, and when the sucked air and surroundings temperature are not higher than 25℃, you still can get total pressure difference as the curves shows.

Dongguan Dereike Intelligent M and E Equipment Co., Ltd

Address: Building 2, CaiBai Street 3, CaiBai Village, Daojiao Town,Dongguan City, 523170, China.

Mobile/Whatsapp/Wechat: 0086 13826960346 Email: info@dereike.com Website: http://www.dereike.com